ISSN 2395-1621

Problem Detection in Plumbs Using Software Robo

#1Prof. A.L.Salunke, #2Mr.Bathe Ankush., #3Ms. Deshmukh Archana., #4Mr.Fargade Anand., #5Mr.Surana Sumeet.

2ankushbathe5@gmail.com

#1Prof., Department of Information Technology
#2345Student, Department of Information Technology

Bhivarabai Sawant Institute of Technology
Research Technology, Wagholi,
Pune-412207

ABSTRACT

To present concept of Pipeline software Robot. Drive control system plays important roles in pipeline robot. In order to inspect and to detect the problem in pipeline, an original mobile pipeline robot with crawler drive unit, power and monitor unit, central control unit, and ultrasonic wave inspection device is developed. Considering the limited space, a compact hardware system is designed based on an ARM processor with controllers. With made-to-order protocol for the crawl robot, an intelligent drive control system is developed. The implementation of the crawl robot demonstrates that the presented drive control scheme can meet the motion control requirements of the pipeline crawl robot.

Keywords: Pipeline software Robot, ARM, FFS, Android app, ,Microcontroller

ARTICLE INFO

Article History

Received: 4th February 2017

Received in revised form :

4th February 2017

Accepted: 6th February 2017

Published online :

6th February 2017

I. INTRODUCTION

We are designing a system which will intelligently take evasive action so that we can avoid any accidents. For this we are having various sensors attached to the controller unit.We have designed a robot which will sense the parameter such as water leakage, gas leakage or the noise generated in the pipe. We have interfaced an gas interfaced with the micro-controller to detect the gas leakage from the pipe. As soon as robot detects that gas is leaked it will sent this information to the main control room through the RF module connected to it.

Pipelines are constructed to transport all kinds of fluids, some toxic, some highly flammable and others fairly unreactive. In every case, it is important for the transported fluid to be contained within the pipeline, and under ideal situations, have no interaction with the surrounding environment. However, every pipe, depending on the material from which it is fabricated, deteriorates progressively with time, and the pipe becomes prone to cracks and heavy corrosion. Many accidents have occurred from fluid leaks owing to the cracks and corrosion of pipelines. These accidents wreak havoc on plants, animals and humans . It is therefore vital to prevent the occurrence of such fluid leaks and save ourselves the disaster.

One very effective way of doing this is to perform regular inspection of pipelines. The information gotten from the inspection is analysed and used to evaluate the condition of the pipeline. The condition of the pipeline analyzed is used to forecast the areas/points of possible fluid leaks and prescribe maintenance operations for the pipeline. This way the pipe condition is monitored and accidental leaks are reduced to the minimum. Pipe Inspection is an essential activity associated with fitness-for-service (FFS) assessments for surface and buried piping at nuclear plants, oil and gas terminals, refineries, industrial sites, cased pipeline crossings, and distribution pipelines for all sorts.

II. LITERATURE SURVEY

"Pipeline Inspection for Corrosion using a Mobile Robotic system, 2013, this paper presents the design, development and testing of a pipeline inspection robot. The robot was built using an autonomous mobile robot, ultrasound sensors and a buzzer. The robot is initially placed at the entrance of the pipe before it is switched on. Once powered, the robot begins to advance forward. The distance between the robot and the bottom of the pipe is measured .

© 2016, IERJ All Rights Reserved

"The design of Natural GAS pipeline inspection robot system", 2015, this paper mainly studied on medium flow drive pipe robot propulsion system friction theory & calculation & simulation method of this theory, we also paid attention to design of natural gas pipeline inspection robot's structure ,the structure of testing device, working principle & testing method.

"Advanced pipe Crawling Crack Sensor Robot", 2015, most of today's robots are used for inspection, surveillance, and monitoring tasks in utility work areas. Some current applications are listed below. Currently, in-pipe robot with tether, which enables the robot to have the enough energy supplies and promptly make up the power loss, still has important application value owing to avoid carrying a heavier energy devices, but the noticeable friction forces of tether restrict the traction force of robot, locomotion distance away from entrance, and the steering inside pipelines with elbows. Therefore, the development of autonomous in-pipe locomotion robot without it becomes urgent, such that the robot can be adaptive to the work of long and complicate pipeline.

III. PROPOSED SYSTEM

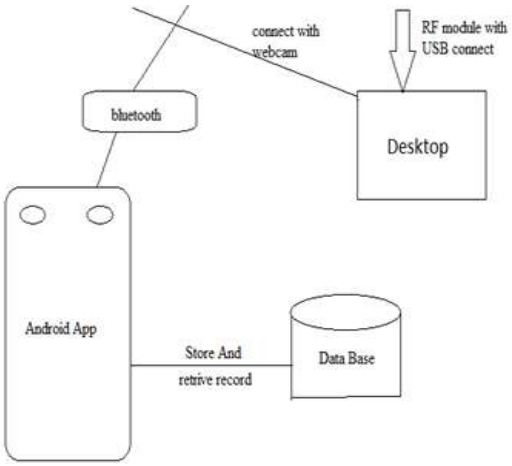

Fig 1. Software architecture

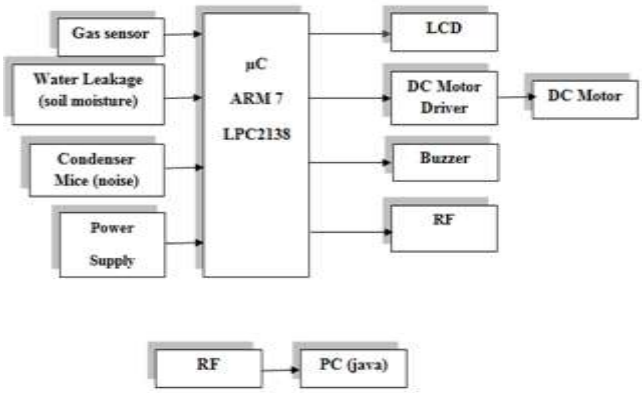

Fig 2. Hardware Architecture

Methodology:

We have designed a robot which will sense the parameter such as water leakage, gas leakage or the noise generated in the pipe. We have interfaced an gas interfaced with the micro-controller to detect the gas leakage from the pipe. As soon as robot detects that gas is leaked it will sent this information to the main control room through the RF module connected to it. The robot will continuously move parallel to the pipe to detect the gas leakage, water leakage or unwanted noise generated. To detect the water leakage we are using two electrodes. If the robot moves and detects the water leakage then this information will be displayed on the main room controller's PC. Condenser mike is used to detect the unwanted sound generated and which has to be eliminated. All this information is shown on the main controller's PC using VISUAL BASIC SOFTWARE. RF module are placed is placed in every area. As soon as robot moves in that area and detects any leakage such as gas or water or noise using RF we will know that robot has detected the leakage in which of the particular area. It continuously check for the leakage, if it found any emergency it activate it's buzzer and alert about leakage also inform to control room.

We are designing a system which will intelligently take evasive action so that we can avoid any accidents. For this we are having various sensors attached to the controller unit.

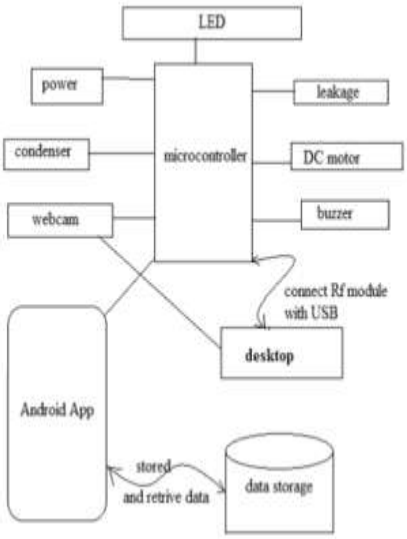

Fig 3. System architecture

IV. ADVANTAGES

Remove humans from potentially hazardous work situations Allow inspection of inaccessible and/or hazardous equipment or work areas.

- Provide on-line inspection/maintenance without loss of equipment plant availability Provide information about the health and condition of critical plant components to facilitate decision-

© 2016, IERJ All Rights Reserved

making regarding plant life management.

- Reduce equipment/plant downtime.
- Improve maintenance & inspection procedures through better coverage & documentations. Industrial ductwork has been wildly used in metallurgy, petroleum, chemical engineering, water supply and other special professions.

V. CONCLUSION

According to special requirements of pipeline detection in oilfield, a novel crawl robot is developed, and the drive control system is studied. The drive control characteristics of the robot are tested, and experimental results prove the feasibility of the presented drive control scheme.

REFERENCES

[1] Pipeline Inspection for Corrosion using a Mobile Robotic system 2013.

[2] The design of Natural GAS pipeline inspection robot system", 2015.

[3] Advanced pipe Crawling Crack Sensor Robot, 2015.

[4] K.Suzumori, T.Miyagawa, M.Kimura, and Y.Hasegawa,"Microinspec- tion robot for 1-in pipes," IEEE/ASME Trans. Mechatronics, vol. 4, no. 3, pp. 286–292, Sep. 1999.

[5] S. G. Roh and H. R. Choi, "Differential-drive in-pipe robot for moving inside urban gas pipelines," IEEE Trans. Robot., vol. 21, no. 1, pp. 1–17, Feb. 2005.

[6] H. T. Roman and B. A. Pellegrino, "Pipe crawling inspection robots: An overview," IEEE Trans. Energy Convers., vol. 8, no. 3, pp. 576–583, Sep. 1993.

[7] A. Zagler and F. Pfeiffer, "MORTIZ, a pipe crawler for tube junctions," in Proc. IEEE Int. Conf. Robot.

© 2016, IERJ All Rights Reserved